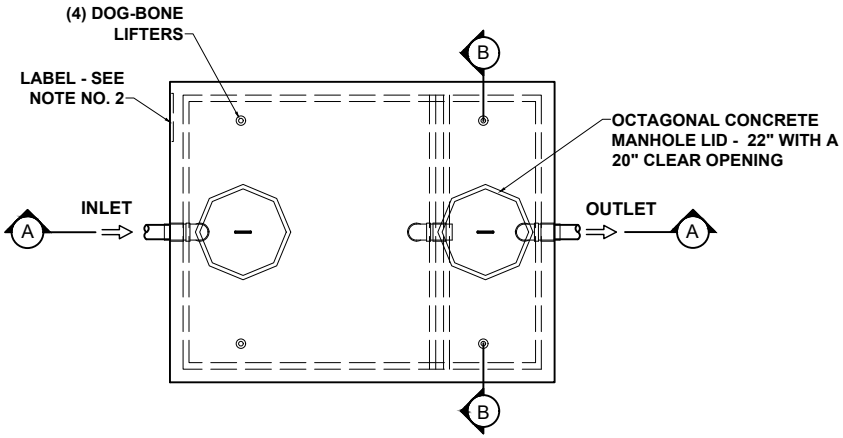

PLAN VIEW

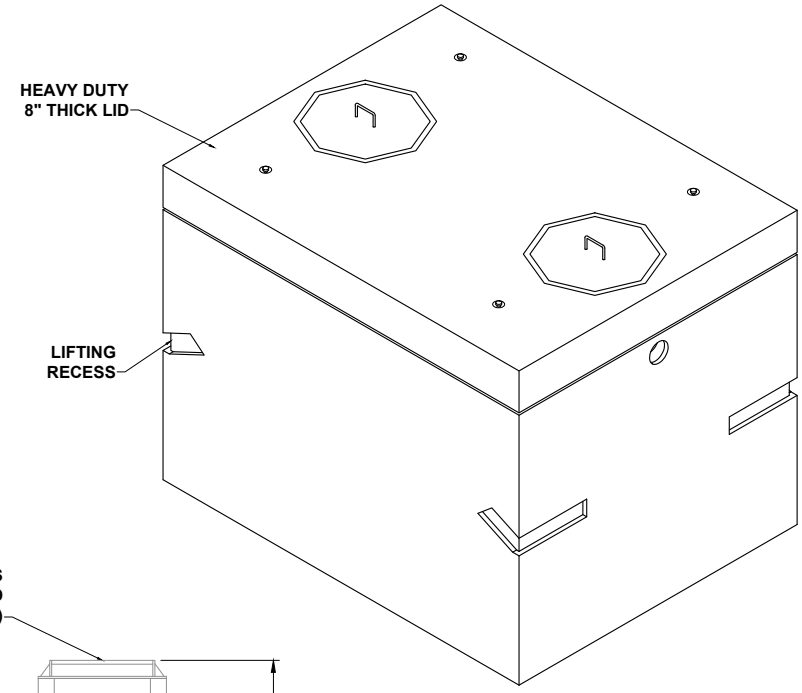

ISOMETRIC VIEW

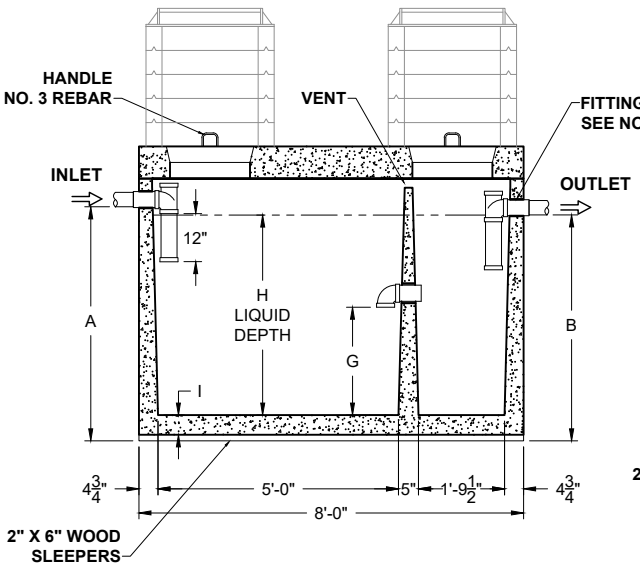

SECTION THRU "A-A"

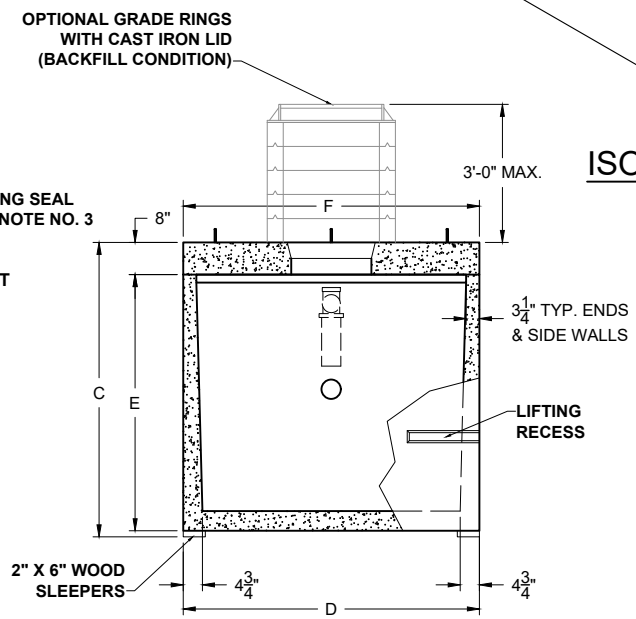

SECTION THRU "B-B"

H-20 TRAFFIC RATED "HEAVY DUTY"

ALL DIMENSIONS ARE IN INCHES & WEIGHTS IN LBS - (RISER WT. NOT INCLUDED)													EXCAVATION SPECIFICATIONS			
MODEL	A	B	C	D	E	F	G	H	I			APPROX. WEIGHT	LENGTH	WIDTH	BELOW INLET	TANK HEIGHT
PC S-1-750-HD	40	38	55	74	45	74	19 3/4	31 1/2	4 1/2			12,805	11'-0"	9'-2"	3'-4"	4'-7"
PC S-1-1000-HD	50	48	65	74	55	74	24 3/4	41 1/2	4 1/2			14,160	11'-0"	9'-2"	4'-2"	5'-5"
PC S-1-1250-HD	59	57	74	74	64	74	29 1/4	50 1/2	4 1/2			15,375	11'-0"	9'-2"	4'-11"	6'-2"
PC S-1-1500-HD	62 1/2	60 1/2	77 1/2	85	67 1/2	85	30 3/4	53 1/2	5			17,720	11'-0"	10'-1"	5'-2 1/2"	6'-5 1/2"

ProCast PRODUCTS INC.
27417 E. Third St., Highland, CA 92346
909-793-7602 phone 909-793-1283 fax
www.procastproducts.com

PRODUCT NAME:
HD SEPTIC TANK

DESCRIPTION:
750 THRU 1500 GALLONS
H-20 TRAFFIC RATED

DESIGN SPECIFICATIONS

DESIGN LOAD: H-20 TRAFFIC RATED

WITH DRY SOIL CONDITIONS (WATER LEVEL BELOW TANK). SUITABLE SUB-BASE BEDDED WITH GRANULAR MATERIAL SHALL BE PREPARED TO HANDLE ANTICIPATED LOADS. FOR COMPLETE DESIGN AND PRODUCT INFORMATION, PLEASE CONTACT PRO-CAST PRODUCTS.

PRO-CAST PRODUCTS RESERVES THE RIGHT TO MAKE CHANGES TO PRODUCT DESIGN AND/OR DIMENSIONS WITHOUT NOTICE. PLEASE CONTACT PRO-CAST PRODUCTS WHENEVER NECESSARY FOR CONFIRMATION OR ADVICE ON PRODUCT DESIGN.

NOTES:

1. NOT USED
2. REFER TO SPECIFICATION SHEET NOS. S-251 & S-252
3. REFER TO SPECIFICATION SHEET NO. S-201
4. REFER TO SPECIFICATION SHEET NO. S-250

SCALE:	DO NOT SCALE	
DRAWN BY:	TPC	12.20.2024
REVISED BY:		
CHECKED BY:		

DRAWING NO.
HD-S-001

g:\3 - standard products folder\new standard product drawings\septic tanks\septic tanks - updated - dec 2024\septic tanks - updated - dec 2024.dwg